SHIMANO

BIOGRAFT XT

BC-XT78

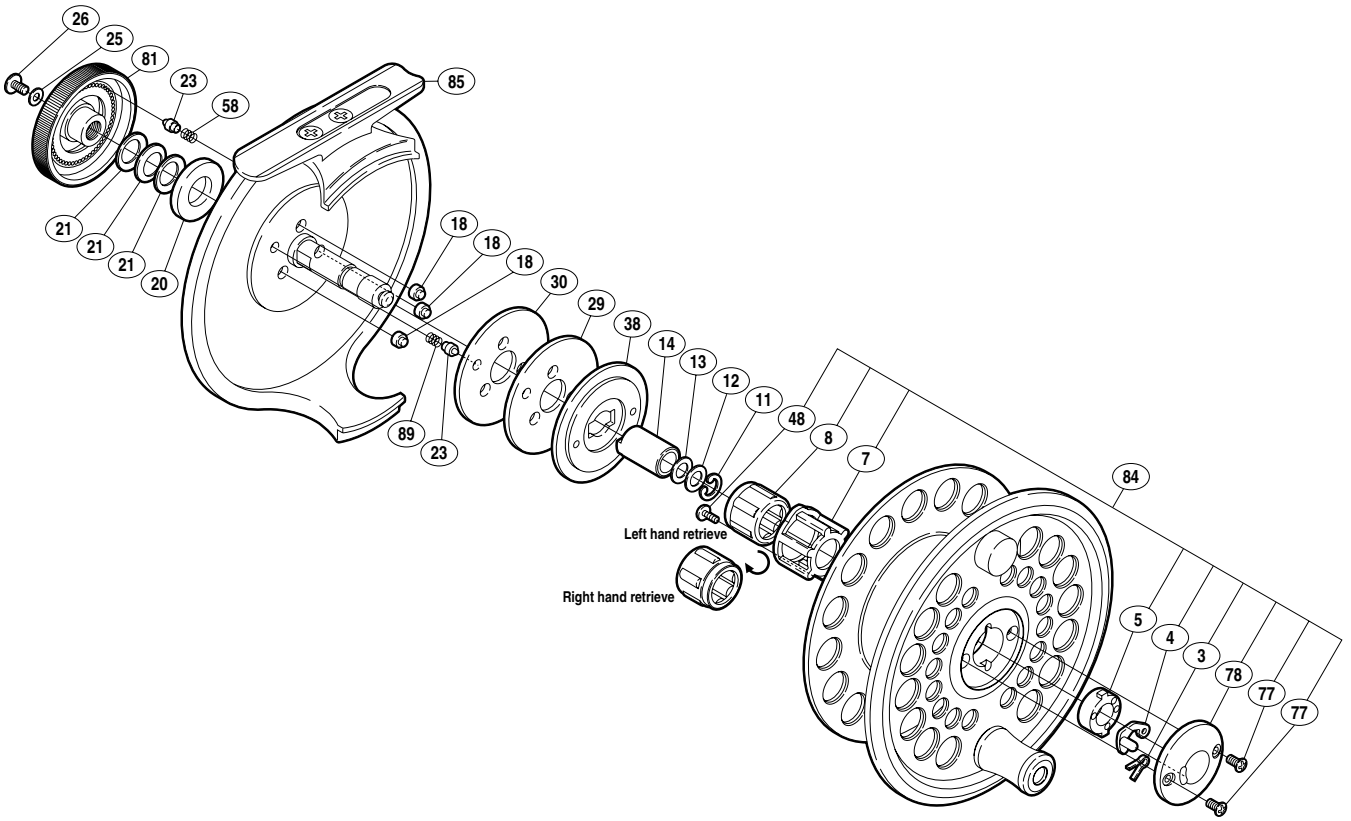

(1RI100007G)

Part No.	Description	Part No.	Description
FLY0003	Spool Lock Spring	FLY0025	Washer
FLY0004	Spool Lock	FLY0026	Drag Knob Screw
FLY0005	Spool Bushing	FLY0029	Drag Washer
FLY0007	Roller Clutch Holder	FLY0030	Drag Washer
FLY0008	Roller Clutch	FLY0038	Drag Plate
FLY0011	C Lock	FLY0048	Screw
FLY0012	Main Shaft Washer	FLY0058	Click Spring
FLY0013	Main Shaft Washer	FLY0077	Screw
FLY0014	Roller Clutch Inner Tube	FLY0078	Spool Cover
FLY0018	Drag Press	FLY0081	Drag Knob
FLY0020	Drag Spring Spacer	FLY0084	Spool Set
FLY0021	Coned Disc Spring	FLY0085	Back Plate Assembly
FLY0023	Click Pin	FLY0089	Click Spring